LEXMARK

Lexmark CS748de

Color Laser Printer

Vibrant color printing for midsize workgroups

Color | 4.3-in. Touch Screen | Solutions | Up to 35 ppm | Duplex | Network | Eco-Mode | Security | USB | Flexible Input

Why Lexmark?

Founded in 1991 from an IBM heritage in Lexington, Kentucky, Lexmark is one of the few American companies to own, develop and market inkjet, monochrome laser and color laser print technologies. Lexmark is poised to deliver on its promise to produce quality, dependable products well into the future.

Robust high-quality color

Rely on the Lexmark CS748de color laser printer for the high-quality color printing essential to business.

- Match corporate colors with Lexmark Named Color Replacement and PANTONE® calibration.
- The high-speed processor and Gigabit Ethernet networking mean fast data transfer and fast processing, even on complex color documents.
- Print quickly at speeds up to 35 ppm and a time to first page as fast as 9 seconds in both black and color.
- Lexmark high-yield cartridges let you print up to 12,000 pages per cartridge in black and 10,000 pages per cartridge in color.[1]

Performance and productivity

The combination of easy-to-use features and reliable performance means business processes are intuitive and you are productive.

- The easy-to-use 4.3-inch color touch screen provides audible feedback and tablet-like navigation.
- Expand input capacity with optional drawers that boost total input capacity up to 4,300 sheets.
- Create custom messages to provide helpful information such as helpdesk telephone numbers and company communications.
- Instead of installing individual drivers for each printer model, the Lexmark Universal Print Driver provides a standardized, one-driver solution.

Business solutions

The Lexmark Embedded Solutions Framework (eSF) helps expand functionality, move information more efficiently throughout your business, lower costs and analyze usage patterns.

- Quickly and efficiently access eSF solutions directly from the 4.3-inch color touch screen.
- The optional hard disk provides the ability to store files on the device and run additional solutions with ease.
- Pre-loaded solutions mean you can be productive and save time, money and paper—right out of the box.
- Additional solutions are available for greater savings and productivity.
- Models with solutions capabilities also have the card reader option for greater security.

Lexmark color

The documents you print define an important image—yours. The Lexmark CS748de color laser printer is perfect for printing reports, marketing collateral and on-demand signage with brilliant color reproduction. So when you put a high-quality color document in a client's hands, you're advancing communication and your company's image at the same time.

Professional color quality

Color communicates, informs and persuades. Vibrant, expressive color also attracts attention and increases impact. In short, color is your brand—who you are. The Lexmark CS748de color laser printer is a color powerhouse. It offers repeatable, accurate color matching and features that create continuity from one document to the next.

- **Easy brand matching** - Match brand sensitive corporate colors on marketing collateral within Microsoft Office with Lexmark Named Color Replacement and PANTONE® calibration.
- **Money-saving color** - Color is business critical, but often it is seen as expensive or wasteful. Lexmark ColorCare Technology helps change that perception. Tools like User Quotas help you manage and make intelligent decisions about color printing.
- **Continuous color** - Print with confidence, knowing the Lexmark CS748de produces documents at optimum quality. Status screens and supply alerts notify you when toner is low, so you don't run out in the middle of a job.

Professional color performance

Whether you need one document or many, consistency is important. The Lexmark CS748de color laser printer delivers in all types of situations—last minute presentations, large print jobs for promotional events or constantly used forms. It can produce high-quality documents on a variety of media while helping you save money at the same time.

- **Consistent color across media** - Lexmark color technology gives you precise, professional color on a variety of media types and sizes. Carry a consistent look across materials and show clients your true colors, no matter what you present to them.
- **Print on demand** - Eliminate waste. Don't print forms, marketing materials or other documents externally and store the paper versions. Instead, with the Forms and Favorites solution, store frequently required files online and print in-house and on demand.
- **On-the-fly updates** - Create custom color documents directly from the Lexmark CS748de. Use print preview and post-process job changes to make updates like removing a cover page or switching between simplex and duplex printing.

Solutions

Reduce unnecessary printing and simplify work processes through Lexmark solutions. The Lexmark Embedded Solutions Framework (eSF) enables you to add a wide range of software apps directly onto the device. Solutions are designed with your productivity in mind, helping you streamline—or even eliminate—paper-intensive business processes.

The following apps are standard on the Lexmark CS748de color laser printer

Forms and Favorites

Eliminate waste and inefficiencies associated with preprinted forms. Store frequently printed forms, marketing materials or other documents online, then print them on demand.

Eco-Settings

Choose from multiple print settings to help reduce energy, paper and toner consumption.

Showroom

Display a customizable, scrolling slideshow on the color touch screen to promote your business or products, or to communicate important messages to your customers or employees.

Change Background

Change the touch screen background to your corporate logo, custom images, a unique message or select from preloaded screens.

Contact your Lexmark Business Solutions Dealer for additional solutions.

Examples of business solutions available through Lexmark authorized business solutions dealers:

Mobility

Today, there are many ways to implement mobile printing but no single solution that fits all. Select from multiple mobility-related solutions that enable your business or organization to capitalize on the benefits of mobile productivity.

Accessibility

Touch screens can present usability and accessibility challenges for people who are blind or visually impaired, have motor skills impairment or use wheelchairs. Customize your printer with solutions that improve its accessibility.

Prevention and Recovery

Network or device downtime slows business down. Lexmark offers solutions that let you access important documents directly from the device during downtime and help recover from unexpected issues.

Key Features

Lexmark CS748de color laser printer shown with the optional 550-sheet drawer, 2,000-sheet high capacity feeder and caster base.

1. Easy brand matching

Consistently match branded colors and print marketing collateral inhouse with Lexmark Named Color Replacement.

2. Intuitive color touch screen

Operate your printer with ease and confidence using the 4.3-inch color touch screen that makes navigation smart and intuitive.

3. Convenient updates

Preview documents and change output settings, such as two-sided printing, directly at the device.

4. Flexible input capacity

With the optional 550-sheet drawer, specialty media drawer and 2,000-sheet high capacity feeder, customize input options to meet your printing needs.

5. Optional hard drive

The optional hard drive increases productivity with job waiting and on-printer form and file storage.

6. Use less energy

The instant warm-up fuser reduces energy consumption and delivers a time to first page as fast as 9 seconds in both black and color.

7. Walk-up USB printing

The front USB port allows for convenient walk-up printing of PDFs and many printable image file formats.

8. Multiple media support

Ultra-reliable paper feeding supports diverse media, including card stock, vinyl labels, banners and more.

Lexmark CS748de Ordering Information

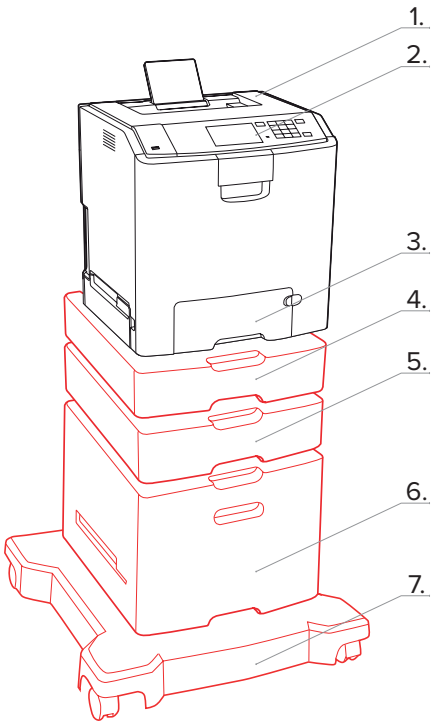

1. 300-Sheet Output Bin
2. 4.3' Touch Screen
3. 550-Sheet Tray and 100-Sheet Multipurpose Feeder
4. 550-Sheet Drawer
5. 550-Sheet Drawer
6. 2,000-Sheet High-Capacity Feeder*
7. Caster Base

Standard
Optional

* Caster base required

Compatible with Lexmark CS748de color laser printer

Part #	Model
41H0150	Lexmark CS748de

Part #	Laser Toner/Print Cartridge
24B5807	CS736, XS73x Black High Yield Return Program Toner Cartridge
24B5804	CS736, XS73x Cyan High Yield Return Program Toner Cartridge
24B5805	CS736, XS73x Magenta High Yield Return Program Toner Cartridge
24B5806	CS736, XS73x Yellow High Yield Return Program Toner Cartridge
C734X20G	Photoconductor Unit
C734X24G	Photoconductor Unit, 4-Pack
C734X77G	Waste Toner Box

Part #	Paper Handling
27S2100	550-Sheet Drawer
27S2400	2,000-Sheet High Capacity Feeder
27S2650	550-Sheet Specialty Media Drawer
27S2190	4.8 inch (12.2 cm) Spacer

Part #	Furniture
3052765	Swivel Cabinet
34T5114	C74x, X74x Caster Base

Part #	Memory Options
1025041	256MB DDR2-DRAM
1025042	512MB DDR2-DRAM
1025043	1024MB DDR2-DRAM
14F0245	256MB Flash Card
27X0014	160+ GB Hard Disk
30G0287	Arabic Font Card
30G0828	Japanese Font Card
30G0825	Korean Font Card
30G0826	Simplified Chinese Font Card
30G0827	Traditional Chinese Font Card

Part #	Application Solutions
57X9000	Lexmark PrintCryption Card
41H0198	C748 Card for IPDS
41H0199	C748 Card for PRESCRIBE Emulation
41H0197	C748 Forms and Bar Code Card
57X0020	PKI Authentication App for eSF Capable Devices
3053996	Large Pod for PKI Card Reader

Part #	Connectivity
27X0025	MarkNet N8250 802.11b/g/n Wireless Print Server
14F0037	MarkNet N8120 Gigabit Ethernet Print Server
1021294	USB Cable (2-meter)
14F0000	Parallel 1284-B Interface Card
1021231	Parallel Cable (10-foot)
14F0100	RS-232C Serial Interface Card

Lexmark CS748de Product Specifications

Product specifications	Lexmark CS748de
Printing	
Display	Lexmark e-Task 4.3-inch (10.9 cm) color touch screen with audible feedback
Print Speed: Up to	Black: 35 ppm / Color: 35 ppm
Time to First Page: As fast as	Black: 9 seconds / Color: 9 seconds
Print Resolution, Color	1200 x 1200 dpi, 4800 Color Quality (2400 x 600 dpi)
Processor	800 MHz
Memory	Standard: 512 MB / Maximum: 1536 MB
Hard Disk	Option available
Recommended Monthly Page Volume[2]	2500 - 10000 pages
Maximum Monthly Duty Cycle: Up to[3]	100000 pages per month
Supplies	
Supplies Yield	10,000[1]-page color High Yield Toner Cartridges (CMY), 12,000[1]-page Black High Yield Toner Cartridge
Cartridge(s) Shipping with Product	10,000[1]-page color (CMY) High Yield Return Program Toner Cartridges, 12,000[1]-page Black High Yield Return Program Toner Cartridge
Paper Handling	
Paper Handling Standard	300-Sheet Output Bin, Integrated Duplex, 100-Sheet Multipurpose Feeder, 550-Sheet Input Tray
Paper Handling Optional	550-Sheet Drawer, 2,000-Sheet High-Capacity Feeder, 550-Sheet Specialty Media Drawer
Paper Input Capacity: Up to	Standard: 650 pages 20 lb or 75 gsm bond / Maximum: 4300 pages 20 lb or 75 gsm bond (Add 3 of 550-Sheet Drawers and 2,000 Sheet High-Capacity Feeder on swivel cabinet)
Paper Output Capacity: Up to	Standard: 300 pages 20 lb or 75 gsm bond / Maximum: 300 pages 20 lb or 75 gsm bond
Media Types Supported	Card Stock, Envelopes, Paper Labels, Plain Paper, Transparencies, Vinyl Labels, Refer to the Card Stock & Label Guide
Media Sizes Supported	10 Envelope, 7 3/4 Envelope, 9 Envelope, A4, A5, B5 Envelope, C5 Envelope, DL Envelope, B5, Executive, Folio, JIS-B5, Legal, Letter, Statement, Universal, Oficio, A6
General	
Standard Ports	USB 2.0 Specification Hi-Speed Certified (Type B), Front USB 2.0 Specification Hi-Speed Certified Port (Type A), Rear USB 2.0 Specification Hi-Speed Certified Port (Type A), Ethernet 10/100/1000 BaseTX (RJ-45)
Optional Network Ports	Internal MarkNet™ N8120 Gigabit Ethernet, Internal MarkNet™ N8250 802.11b/g/n Wireless
Optional Local Ports	Internal RS-232C serial, Internal 1284-B Bidirectional Parallel
Print Noise Level, Operating	55 dBA
Energy Star	Yes
Specified Operating Environment	Temperature: 16 to 32°C (60 to 90°F), Humidity: 8 to 80% Relative Humidity, Altitude: 0 - 3048 Meters (10,000 Feet)
Size (in. - H x W x D) / Weight (lb.)	17.9 x 17.1 x 15.7 in. / 56.4 lb.

[1] Based on approximately 5% print coverage. Actual yields may vary based on factors such as page coverage, image type, job size, print/copy/fax modes, and duplexing.
[2] "Recommended Monthly Page Volume" is a range of pages that helps customers evaluate Lexmark's product offerings based on the average number of pages customers plan to print on the device each month. Lexmark recommends that the number of pages per month be within the stated range for optimum device performance, based on factors including: supplies replacement intervals, paper loading intervals, speed, and typical customer usage.
[3] "Maximum Monthly Duty Cycle" is defined as the maximum number of pages a device could deliver in a month using a multi-shift operation. This metric provides a comparison of robustness in relation to other Lexmark printers and MFPs.
[4] Print and copy speeds measured in accordance with ISO/IEC 24734, excludes first set of text documents. For more information see: www.lexmark.com/ISOspeeds.

Lexmark and Lexmark with the diamond design are trademarks of Lexmark International, Inc., registered in the United States and/or other countries. All other trademarks are the property of their respective owners. ENERGY STAR® is a U.S. registered mark. Information in this document is subject to change without notice. Unison is a trademark of Lexmark International, Inc. Information in this document is subject to change without notice.

AirPrint and the AirPrint logo are trademarks of Apple Inc.

13CH2934